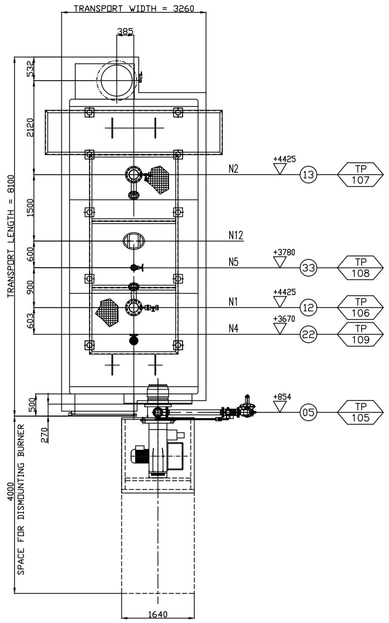

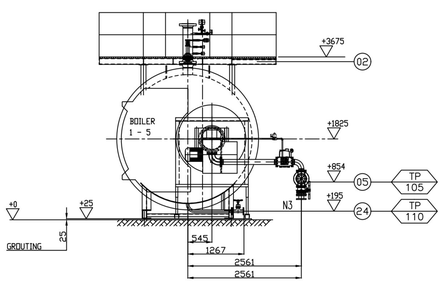

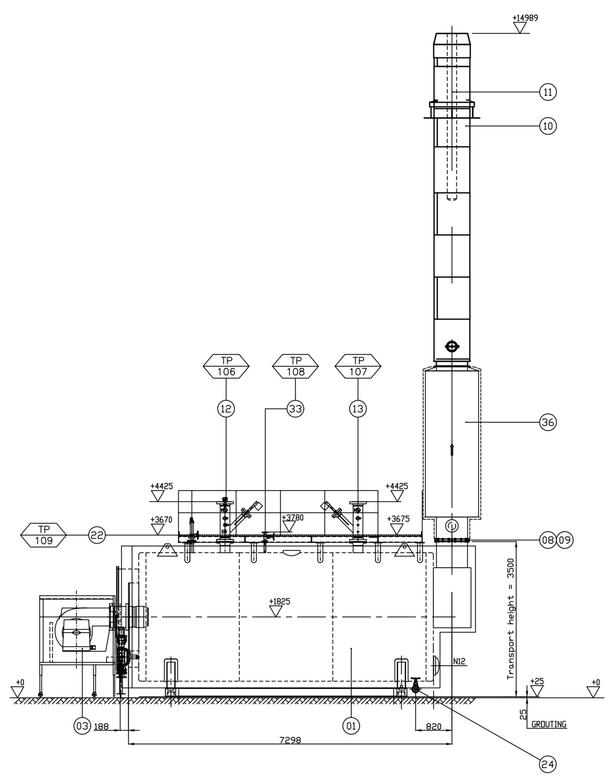

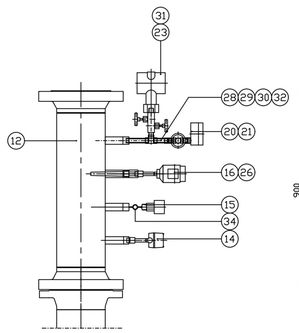

CONNECTION PIECES
SCALE: 1:10

HOT WATER SUPPLY 8"

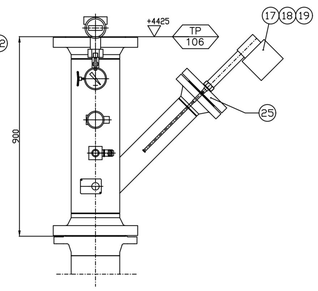

HOT WATER RETURN 8"

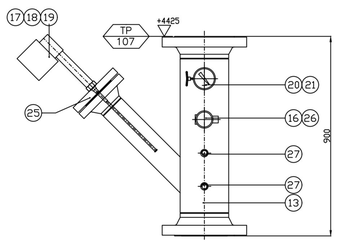

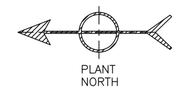

TECHNICAL DATA								
TERMINAL POINT	BOILER NOZZLE	qty	DESCRIPTION	DIAMETER	PN	DIN	LBS	ANSI
101		1	GASSUPPLY 5 barg	DN80	16	2633		
102		1	VENT	1"				
103		1	SAFETY RELIEF	3/4"				
104		1	GASSUPPLY 500 mbarg	DN80	16	2633		
105		1	GASSUPPLY 500 mbarg	DN100	16	2633		
106	N1	1	HOT WATER SUPPLY	8"			150	B16.5
107	N2	1	HOT WATER RETURN	8"			150	B16.5
108	N5	1	BOILER VENT	1 1/4"			300	B16.5
109	N4	1	SAFETY RELIEF	2 1/2"			300	B16.5
110	N3	1	DRAIN	2"			300	B16.5
	N12	2	MANHOLE	320/420 mm				

NOTES:

FOR PRESSURE PARTS SEE DRAWING VKK :A1001-00-64240-01-4a
FOR CONNECTION PIECES SEE DRAWING VKK :A1001-01-64240-01-4a
FOR PLATFORM SEE DRAWING VKK :A1032-01-64240-00-2
FOR BURNER GASTRAIN SEE DRAWING MONARCH :CE-1288
FOR BURNER CONTROL PANEL SEE DRAWING MONARCH :65368/303649
FOR STACK SEE DRAWING BOSNIEUWERKERK :5873-61

POS NBRS, THERMINAL POINTS AND POSITIONING
REPRESENTABLE VOOR ALL BOILERS
UNDERNEATH BOILER STEEL- AND STAIR SUPPORT
25 mm GROUTING IS APPLIED

PRESSURE REDUCING STATION (LOOSE SUPPLY)
SCALE 1:10

VIEW P

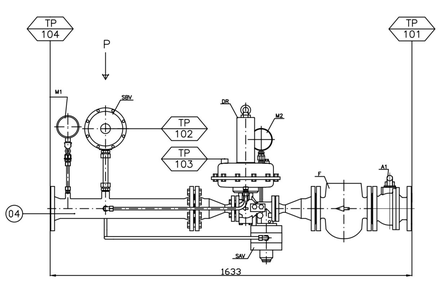

DETAIL GAS TRAIN AND BURNER
SCALE 1:10

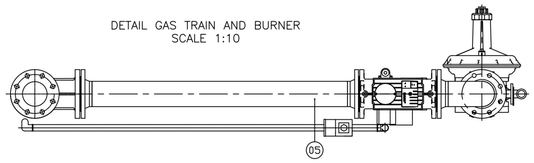

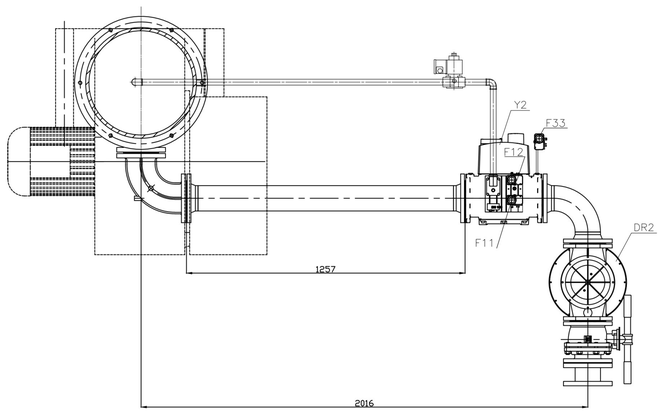

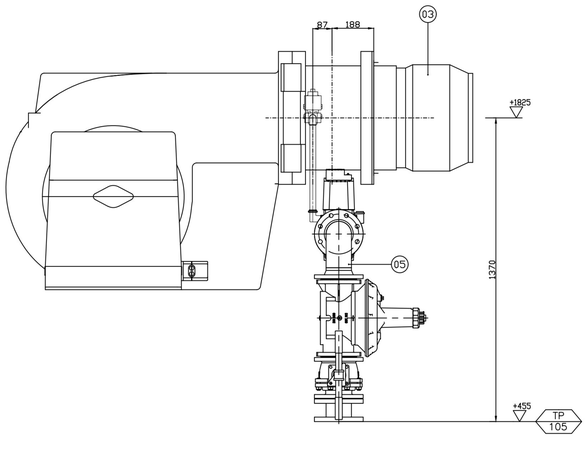

ITEM	QTY	DISCRIPTION	SUPPLIER	DIMENSIONS	REF/TAG
36	2	RESONANCE SILENCER	TIO	–	–
35	2	SUPPORT GAS TRAIN	–	–	–
34	2	PIG TALE	–	G 1/2"	–
33	2	VENT VALVE	ERIKS	GLOBE 1 1/4" – 300 lbs	–
32	2	WELD STUB THREATED	–	G 1/2" SS	–
31	2	MANIFOLD/BLEED 2-WAY	ROSEMOUNT	G 1/2" SS	–
30	2	STRAIGTH TEE THREATED	–	G 1/2" SS	–
29	2	PIPE THREADED ENDS	–	G 1/2" L=50 SS	–
28	2	PIPE THREADED ENDS	–	G 1/2" L=100 SS	–
27	4	BLIND PLUG THREADED	–	G 1/2" L=150	–
26	4	THERMOWELL THREATED	BARSTOCK	BARSTOCK G 1/2" L=150	–
25	4	BLINDFLANGE	–	4"– 300 lbs	–
24	2	DRAIN VALVE	ERIKS	GLOBE 2" 300 Lbs	–
23	2	PRESSURE TRANSMITTER	ROSEMOUNT	3051T	1/2"G SS
22	2	SAFETY VALVE	ERIKS	TYPE 30 2 1/2"	SP=16 barg
21	4	PRESSURE INDICATOR	ERIKS	18 barg	1/2"G SS
20	4	PRESSURE INDICATOR VALVE	ERIKS	NEEDLE VALVE	1/2"G SS
19	4	LOW WATER AMPLIFIER	GESTRA	NRS 1–7b	IN PANEL
18	4	LOW WATER TRANSMITTER	GESTRA	NRG16–11	3/4"G SS
17	4	LOW WATER ELECTRODE PEN	GESTRA	L=500 SS	1/2"G
16	4	TEMPERATURE TRANSMITTER	ROSEMOUNT	644H	1/2"G
15	2	MAXIMUM PRESSURE SWITCH	FEMA	DWAM18	1/2"G
14	2	MAXIMUM TEMP SWITCH	JUMO	ATHs–20	1/2"G
13	2	HOT WATER RETURN CONNECTION PIECE	VKK	8"–150Lbs RF Fl.	
12	2	HOT WATER SUPPLY CONNECTION PIECE	VKK	8"–150Lbs RF Fl.	
11	2	STACK SILENCER	BOSNIEUWERKERK		
10	2	STACK	BOSNIEUWERKERK		
09	2	STACK VALVE MOTOR	BELIMO	GM230A	Switch S2A
08	2	STACK VALVE	BOSNIEUWERKERK		
06	2	CONTROL PANEL	WEISHAUPT	1000x1200x300	
05	2	GAS TRAIN		DN100–500 mbarg	CE–1288
04	2	GAS PRESSURE REDUCING STATION	WEISHAUPT	5/2a–25/80 – 5 barg	CE–1288
03	2	GAS BURNER WITH COMBUSTION AIR FAN	WEISHAUPT	GTU/2–A ZM–1UN–CE	CE–1288
02	2	PLATFORM AND STAIRS	VKK	GALVANISED STEEL	
01	2	HOT WATER BOILER	VKK	HWO101–64 8.2 MW,16 barg	

REV.	DESCRIPTION OF REVISION	BY	DATE	APPR.	DATE	STATUS
A	ADDED CHANGED GAS STREET	[redacted]	17–10–2023	[redacted]	17–10–2023	
0	FIRST ISSUE		13–10–2023		13–10–2023	

SUPPLIER: GASUNIE DOCUMENT NUMBER F-643-T-LP-000-006-001 | REV 0 | PURCHASE ORDER NUMBER 5210046234

GASUNIE: FINAL | Name: Siebe Oosterhuis | Dept: DTMM | Sign: | Date: 17-10-2023

[redacted] Datum: 023.10.18 1:19:41 02'00'

DESTINATION: GASUNIE EEMS ENERGY TERMINAL

TITLE: BOILER LAYOUT H-71101 and H-71201

REV: DRAWN [redacted] 13-10-2023
0 APPR. [redacted] 13-10-2023

ORDER No.:

SCALE: 1:50 | PROJECTION METHOD:

COPYRIGHT BY DUTCH LAW

Standard Fasel Worldwide Energy Services

DRAWING NO.: 213819-010-011 | SHEET: 1/1 | REV.: A

ARCHIVE NUMBER: